MARCH/APRIL 1990 ISSUE # 29

VZ 200/300

HUNTER VALLEY

VZ JOURNAL

RS-232 SERIAL PORT FOR VZ 200/300 COMPUTERS TALK TO THE WORLD OR ANOTHER COMPUTER

PRODUCED BI-MONTHLY BY H.V.VZ.U.G.

EDITOR'S COMMENTS . . . 29/2

THE CIRCUIT DIAGRAMS WERE DONE WITH A CAD (COMPUTER AIDED DESIGN) PROGRAM ON AN IBM PC COMPATIBLE COMPUTER. THE TEXT WAS COMPILED USING DISK WORD PROCESSOR PATCH 3.3 AND HI-RES SCREEN DUMPS WITH LARRY TAYLOR'S PRINTER PATCH V1.4.

** ** ** NEWCASTLE COMPUTER SHOW ** ** **

THE ANNUAL NEWCASTLE COMPUTER SHOW WILL BE HELD SEPTEMBER 20-22. I'VE RECEIVED A COUPLE EXELLENT DEMONSTRATION PROGRAMS SO FAR AND WE STILL NEED MORE IN WAY OF NEW HI-RES SCREENS, MUSIC DEMOS, ETC. ALL HELP WELCOME AND VERY MUCH APPRECIATED. ED.

HELP - SELL & TELL - - - PAGE 3

APOLOGIES, VZ DISKMAG PRICE DROP, BOOKS AND VZ EQUIPMENT FOR SALE.

RAM BASIC BY ROBERT QUINN PAGES 4-5

THIS EXTENDED BASIC BY ROBERT WILL GIVE YOU ALL HIDDEN VZ COMMANDS JUST BY TYPING THEM IN AND CAN ALSO BE MERGED WITH SUITE 2 TO GIVE A REALLY POWERFUL UTILITY.

DISK DRIVE HINTS & TIPS PAGE 5

MOVE BY BOB KITCH PAGES 6-10

PERSONS WITHOUT AN EDITOR ASSEMBLER OR WHO DON'T WANT TO DO ALL THE TYPING CAN PURCHASE THE COMPLETE SUITE OF PROGRAMS FOR $20.00 FROM:

BOB KITCH 7 EURELLA STREET KENMORE QLND 4069 (07) 378 3745

CHANGE GRAPHICS BY B. GREEVE 10-12

THIS UTILITY BY BRIAN WILL ALLOW YOU TO LPRINT OR LLIST INVERSE AND GRAPHIC CHARACTERS WITH A CHARACTER OF YOUR CHOICE.

COMPUTERS PLUS PRINTERS PAGE 13

JUST SOME GENERAL OBSERVATIONS ABOUT TRYING TO MATCH A VZ WITH A PRINTER AND SOME PROBLEMS AND HOW TO OVERCOME THEM.

VZ RS-232 SERIAL INTERFACE 14-18
BY PETER & ANDY HICKMAN

AT LONG LAST A TRUE RS-232 PORT FOR THE VZ WHICH IS DISK BASED AND SIMPLE TO CONSTRUCT TOGETHER WITH THE SOFTWARE YOU CAN TALK TO THE WORLD VIA A MODEM OR TO ANOTHER COMPUTER. THE NEW VZ MODEM PROGRAM AND FAST M/C EDITOR/ASSEMBLER ARE AVAILABLE FROM PETER HICKMAN. SEE HIS SOFTWARE AD ON PAGE 18.

USER GROUPS ** NEWS ** SUBS PAGE 19

SOFTWARE FOR SALE - PATCH3.3 PAGE 20
EXTENDED DOS & MENU-FILE COPIER

BELIEVE IT OR NOT . . .

EARLY THIS YEAR I VISITED BOTH VICTORIA AND QUEENSLAND AND NOW AT LONG LAST I UNDERSTAND WHY THEY CALL NEW SOUTH WALES THE PREMIER STATE.

COPYRIGHT - THE HUNTER VALLEY VZ JOURNAL IS SUBJECT TO COPYRIGHT AND NO MATERIAL IN THE JOURNAL MAY BE REPRODUCED IN PART OR WHOLE WITHOUT THE CONSENT OF THE HUNTER VALLEY USERS' GROUP OR THE AUTHOR WHO RETAINS COPYRIGHT.

APOLOGIES - - -

AS A RESULT OF MY CONTINUING MEDICAL AND PERSONAL PROBLEMS I'VE SLOWED DOWN SOMEWHAT AND I'M WAY BEHIND IN JOURNAL PRODUCTION. I WANT TO ASSURE OUR SUBSCRIBERS THAT I HAVE NO PLANS TO CEASE PRODUCTION OF THE JOURNAL AND IN DUE COURSE ITS PRODUCTION WILL CATCH UP.

LATE IN JUNE I FINISHED A 10 WEEK COMPUTER OFFICE APPLICATION COURSE USING AN IBM PC COMPATIBLE WITH A FINAL MARK OF 97%. IT WAS HARD GOING, BUT THE RESULTS WERE WELL WORTH THE EFFORT AND BEING ABLE TO STUDY AT HOME WAS A VERY BIG HELP IN ACHIEVING ABOVE RESULTS.

VZ DISK MAGAZINE - $20.00 PER ANUM

JASON OAKLEY WISHES TO ADVISE EVERYONE THAT HE HAS LOWERED THE SUBSCRIPTION COST FOR ONE YEAR TO $20.00 WHICH MAKES IT MUCH BETTER VALUE FOR THE MONEY.

** ** ** NEW - FOR SALE - NEW ** ** **

BOOKS - VPROGRAMMEZ-VZ-VZ - $10.50 EA.
SURFACE POSTAGE IN AUSTRALIA AN NEW ZEALAND IS INCLUDED IN PRICE
THIS IS MY OWN SPECIAL BOOK FOR BEGINNERS AND ADVANCED VZERS.

BEGINNER'S GUDE TO THE VZ200/300 EDITOR ASSEMBLER
BY PETER SCHAPER - NEW - $20.00 EACH

THIS BOOK EXPLAINS IN SIMPLE LANGUAGE HOW TO USE THE DICK SMITH EDITOR ASSEMBLER UNIT. THE LITTLE INSTRUCTION BOOKLET THAT COMES WITH THE TAPE IS NOT VERY EASY TO UNDERSTAND TO MANY FOLK. PETER USES SOME SHORT M/L ROUTINES TO EXPLAIN THE USE OF THE ED/ASS BUT HE DOES NOT TEACH YOU M/L AS SUCH.

AS I MENTIONED PREVIOUSLY IN LE'VZ, THE BOOK WILL BE PRINTED AND PUT TOGETHER WHEN ORDERED. I DO THIS AS SOON AS POSSIBLE, BUT THERE WILL BE A DELAY. THERE ARE FIFTY EIGHT PAGES OF A4 SIZE SO IT IS GOOD VALUE FOR MONEY.

CONTACT: MR JOHN D'ALTON 39 AGNES STREET TOOWONG QLD 4066
PHONE - (07) 371 3707

FOR SALE - - -

1 OFF VZ200 & AQUARIUS DATASSETTE - $50.00 PLUS $5.00 POST AND PACKING.
1 OFF VZ200, VZ DATASSETTE, VZ200 16K MEMORY EXPANSION & PRINTER INTERFACE - $100.00 PLUS $15.00 POST AND PACKING.

ON BEHALF OF ALEX TAYLOR CONTACT:
JOE LEON 22 DRURY STREET WALLSEND 2287 (049) 51 2756

FOR SALE - - -

1 OFF ORIGINAL VZ 300 GAMES DISK # 4 - $15.00
(INCLUDES DUEL, VZ CHESS, HAMBURGER SAM AND LUNAR LANDER)

1 OFF DOT MATRIX PRINTER PATCH V1.4 (DISK) BY LARRY TAYLOR - $8.00
(ALLOWS HI-RES SCREEN DUMPS, GRAPHICS AND INVERSE PRINTOUT)

CONTACT JOE LEON 22 DRURY STREET WALLSEND 2287 (049) 51 2756

DISCLAIMER - EVERY EFFORT IS MADE TO INSURE THE ACCURACY OF INFORMATION CONTAINED WITHIN BE IT GENERAL, TECHNICAL, PROGRAMMING, ETC. NO RESPONSIBILITY CAN BE ACCEPTED BY HUNTER VALLEY VZ USERS' GROUP OR AUTHOR AS A RESULT OF APPLYING SUCH INFORMATION IN PRACTICE.

```
2 '*****************************************************************
4 '*   RAM RESIDENT EXTENDED BASIC FOR VZ 200/300 COMPUTERS        *
6 '*****************************************************************
8 '
10 'WHEN RUN, THIS PROGRAM WILL COPY FROM ROM TO RAM (AT TOP OF
20 'MEMORY) THE WORD TABLE, MOST OF THE LIST ROUTINE AND THE
30 'INPTT SCAN TOKENISER ROUTINE, AND MAKE MODIFICATIONS THAT
40 'WILL FORCE YOUR VZ TO USE THE  RAM WORD TABLE FOR LIST,
50 'LLIST AND KEYBOARD ENTRY OF DIRECT COMMANDS AND BASIC LINES.
60 'A LIST WILL DISPLAY OF ALL THE EXTRA BASIC WORDS THAT HAVE
70 'BEEN RESTORED TO THE VZ WORD TABLE.
80 'WHEN THE PROGRAM STOPS RUNNING YOU CAN NEW YOUR VZ AND ENTER
90 'PROGRAMS THAT MAKE USE OF THESE NEW BASIC WORDS, OR USE THEM
100 'AS DIRECT COMMANDS, USING CORRECT SYNTAX AS PER THE TRS-80
110 'COMPUTER.
115 'RAMBASIC CAN BE USED ALONE AS AN EXTENDED BASIC,
120 'OR IT CAN BE APPENDED TO SUITE2: SIMPLY LOAD YOUR COPY
130 'OF SUITE2 AND TYPE IN THE LINES OF RAMBASIC, BUT
140 'DO NOT ENTER ANY OF THE REM LINES (') IN THIS PROGRAM WITH
150 'LINE NUMBERS LESS THAN 200.
160 'SUITE2 WITH RAMBASIC APPENDED TO IT SHOULD THEN BE SAVED
170 'AS SUITE3.
180 'RUNNING SUITE3 WILL GIVE YOU ACCESS TO ALL THE FACILITIES
190 'OF SUITE2 AND THE EXTENDED BASIC OF RAMBASIC.
198 '
599 'LOWER TOP OF MEMORY ****************************************
600 A=(PEEK(30897)+PEEK(30898)*256)-999::B%=A/256:C%=A-B%*256
610 POKE30897,C%:POKE30898,B%:CLEAR50
620 A=PEEK(30897)+PEEK(30898)*256+1:E=65536
629 'SET UP LDIR COPY ROUTINE ************************************
630 FORR=29184TOR+11:READC%:B=B+C%:POKER,C%:NEXT
640 B%=A/256:C%=A-B%*256:POKE29188,C%:POKE29189,B%
649 'COPY WORD TABLE TO RAM: A TO A+465 **************************
650 POKE30862,0:POKE30863,114:D=USR(0)
659 'MODIFY RAM WORD TABLE ***************************************
660 FORR=1TO19:B%=1:READB:READA$:PRINTA$,
670 FORC%=A+B-ETOC%+LEN(A$)-1:POKEC%,ASC(MID$(A$,B%,1)):B%=B%+1
680 NEXT:NEXT
689 'MAIN LIST: A+466 TO A+612 ***********************************
690 D=A+466:B%=D/256:C%=D-B%*256:POKE29188,C%:POKE29189,B%
700 POKE29185,51:POKE29186,43:POKE29191,147:POKE29192,0:D=USR(0)
709 'LIST SUBROUTINE: A+613 TO A+639 *****************************
710 D=A+613:B%=D/256:C%=D-B%*256:POKE29188,C%:POKE29189,B%
720 POKE29185,157:POKE29186,46:POKE29191,27:D=USR(0)
729 'SERVICE ROUTINE FOR DOS EXIT: A+640 TO A+653 ****************
730 FORR=A+640-ETOA+653-E:READB:POKER,B:NEXT:B%=(A+640)/256
740 C%=(A+640)-B%*256:POKE31199,195:POKE31200,C%:POKE31201,B%
749 'MODIFYING LIST **********************************************
750 FORR=1TO11:READB:READC%:B%=(A+C%)/256:C%=(A+C%)-B%*256
760 POKEA+B-E,C%:POKEA+B+1-E,B%:NEXT
770 POKEA+483-E,0:POKEA+484-E,0:POKEA+485-E,0
779 'INPUT SCAN JUMP VECTOR ROUTINE: A+654 TO A+675 **************
780 FORR=A+654TOA+675:READB:POKER-E,B:NEXT
790 B%=(A+676)/256:C%=(A+676)-B%*256
800 POKEA+668-E,C%:POKEA+669-E,B%
809 'INPUT SCAN: A+676 TO A+704 **********************************
810 D=A+676:B%=D/256:C%=D-B%*256:POKE29188,C%:POKE29189,B%
820 POKE29185,130:POKE29186,26:POKE29191,26:POKE29192,0:D=USR(0)
830 D=A+705:B%=D/256:C%=D-B%*256:POKEA+700-E,C%:POKEA+701-E,B%
840 POKEA+702-E,195:POKEA+703-E,156:POKEA+704-E,26
```

```
849 'INPUT SCAN TOKENISER: A+705 TO A+912 ***********************
850 POKE29188,C%:POKE29189,B%:POKE29185,192
860 POKE29186,27:POKE29191,208:POKE29192,0:D=USR(0)
869 'MODIFYING INPUT SCAN TOKENISER ****************************
870 FORR=1TO11:READB:READC%:B%=(A+C%)/256:C%=(A+C%)-B%*256
880 POKEA+B-E,C%:POKEA+B+1-E,B%:NEXT
889 'INITIALISE JUMP VECTOR ************************************
890 B%=(A+654)/256:C%=(A+654)-B%*256
900 POKE29184,C%:POKE29185,B%:POKE29186,42:POKE29187,0
910 POKE29188,114:POKE29189,34:POKE29190,4:POKE29191,120
920 POKE29192,201:POKE30862,2:B=USR(0)
930 POKE30862,74:POKE30863,30
998 '
999 'LDIR ******************************************************
1000 DATA33,80,22,17,0,0,1,210,1,237,176,201
1009 'WORDS: FIRST CHARACTER OF EACH WORD IS INVERSE ***********
1010 DATA20,"RANDOM",102,"DEFINT",108,"DEFSNG",114,"DEFDBL",133
1020 DATA"RESUME",142,"ON",230,"DELETE",236,"AUTO",271,"VARPTR"
1030 DATA280,"ERL",283,"ERR",286,"STRING$",308,"MEM",350,"FRE"
1040 DATA356,"POS",417,"CINT",421,"CSNG",425,"CDBL",429,"FIX"
1049 'LIST & TERMINAL INPUT DOS EXIT SERVICE ROUTINE ***********
1050 DATA8,241,254,43,32,4,8,195,0,0,8,195,123,34
1059 'LIST MODIFICATIONS DATA ***********************************
1060 DATA519,541,525,532,561,613,585,0,591,587,608,598,616,635
1070 DATA620,552,623,563,633,552,648,486
1079 'INPUT SCAN VECTOR ROUTINE *********************************
1080 DATA217,8,225,124,254,26,32,8,125,254,130,32,3,33,0,0,229,8
1090 DATA217,195,147,66
1099 'TOKENISER MODIFICATIONS DATA ******************************
1100 DATA721,860,727,888,731,894,739,860,746,860,756,860,786,783
1110 DATA802,826,878,717,760,-1,764,830
```

DISK DRIVE HINTS & TIPS

HINT 1 — DRIVE HEAD BANGING

SINGLE DRIVE USERS IF YOU WANT TO STOP YOUR DRIVE BANGING AT POWER UP OR RESET THEN PLUG LEAD FROM DRIVE INTO DRIVE 2 SOCKET ON DISK CONTROLLER AND IT WILL BANG NO MORE. DON'T FORGET TO TYPE IN DRIVE 2 OR ACTIVATE IT FROM WITHIN SOFTWARE. ROBERT QUINN.

HINT 2 — HEAD PRESSURE PAD PROBLEMS

IF FOR SOME REASON YOU HAVE TROUBLE INSERTING DISK IN DRIVE, NEVER USE FORCE OR DAMAGE CAN RESULT. THE SAME GOES IF YOU'RE REMOVING DISK AND IT WON'T COME OUT. IF YOU FORCE IT IN OR OUT THEN YOU COULD DAMAGE OR TEAR OFF FELT PRESSURE PAD RENDERING DRIVE USELESS. TAKE DRIVE COVER OFF AND FREE DISK GENTLY AS FELT PRESSURE PADS ARE EXTREMELY DIFFICULT TO BUY.

HINT 3 — INPUT/OUTPUT ERRORS

ERRATIC DRIVE BEHAVIOUR AND INPUT/OUTPUT ERRORS CAN OCCUR IF DRIVE/S IS/ARE TOO CLOSE TO TV SET'S OR MONITOR'S MAGNETIC FIELD OR LARGE METAL OBJECTS. ANOTHER PROBLEM AREA IS IF DRIVE, POWER OR OTHER LEADS CROSS EACH OTHER CAUSING SIGNAL ITERFERENCE. PARRALLEL LEADS NO PROBLEM. PETER HICKMAN.

```
00001 ;
00002 ;SOURCE:MOVE
00003 ;ORIGIN:0BC00H
00004 ;OBJECT:MOVEUP
00005 ;
00006 ;SCREEN REPLACEMENT SUBS.
00007 ;  BY BOB KITCH.
00008 ;    25/APR./89
00009 ;
00010 ;
00011 ;
00012 ;
00013 VRAM EQU  7000H
00014 ;START OF VIDEO SCREEN.
00015 SSCN EQU  08200H
00016 ;START OF SCREEN BUFFER.
00017 SZSC EQU  0800H
00018 ;SIZE OF SCREEN.
00019 HSZC EQU  0400H
00020 ;HALF SIZE SCREEN.
00021 ESCN EQU  SSCN+SZSC
00022 ;END OF SCREEN BUFFER + 1.
00023 LLEN EQU  20H
00024 ;LINE LENGTH IN BYTES.
00025 NLIN EQU  40H
00026 ;NUMBER OF LINES.
00027 BIG  EQU  0FFFFH+1
00028 ;EQ. TO 65536D.
00029 ZERO EQU  00H
00030 ;ZERO FOR OFFSETS.
00031 SBF1 EQU  0C000H
00032 ;START OF PICTURE BUFFERS.
00033 SBF2 EQU  SBF1+SZSC
00034 SBF3 EQU  SBF2+SZSC
00035 SBF4 EQU  SBF3+SZSC
00036 SBF5 EQU  SBF4+SZSC
00037 SBF6 EQU  SBF5+SZSC
00038 SBF7 EQU  SBF6+SZSC
00039 SBF8 EQU  SBF7+SZSC
00040 DLAY EQU  4038H
00041 ;DELAY ROUTINE IN DOS.
00042 DURD EQU  22H
00043 ;DELAY DURATION IN MSEC.
00044 TURN EQU  0C9H
00045 ;OPCODE FOR RETURN.
00046 JMP  EQU  0C3H
00047 ;OPCODE FOR JUMP.
00048 IVEC EQU  787DH
00049 ;3 BYTE INTERRUPT VECTOR.
00050 ;
00051 ;
00052 ;JUMP TABLE FOR 9 PIC MOVES.
00053 STRT JP   SC0
00054      JP   SC1
00055      JP   SC2
00056      JP   SC3
00057      JP   SC4
00058      JP   SC5
00059      JP   SC6
00060      JP   SC7
00061      JP   SC8
00062 ;
00063 ;
00064 ;SCREEN 0 - SPLAT.
00065 SC0  CALL SAVR
00066 ;SAVE REGISTERS.
00067      LD   HL,SBF1
00068 ;SOURCE - START OF BUFFER.
00069      LD   DE,SSCN
00070 ;DEST - START OF SCREEN.
00071      LD   BC,SZSC
00072 ;SIZE - SCREEN FULL.
00073      LDIR
00074 ;MOVE IT.
00075      CALL DPLY
00076 ;DISPLAY AND PAUSE.
00077      CALL RESR
00078 ;RESTORE REGISTERS.
00079      RET
00080 ;FINISH
00081 ;
00082 ;
00083 ;SAVE REGISTERS AND DISABLE
00084 ;INTERRUPTS FOR CALCULATIONS
00085 ;AND MOVES.
00086 SAVR DI
00087      EX   (SP),HL
00088 ;PUT RET ADDR INTO HL & SAVE
00089 ;HL - DOESN'T CHANGE SP.
00090      PUSH DE
00091      PUSH BC
00092      PUSH AF
00093      PUSH HL
00094 ;PUT RET ADDR. ON TOP.
00095 ;
00096 ;
00097 ;RESET HL TO ENTRY VALUE.
00098      LD   HL,11
00099 ;2 TIMES NO. OF REGS. + 3
00100      ADD  HL,SP
00101 ;POINT TO H-VALUE IN STACK.
00102      PUSH AF
00103 ;SAVE AF REG.
00104      LD   A,(HL)
00105 ;AND PUT IN A REG.
00106      DEC  HL
00107 ;NOW POINT TO L-VALUE.
00108      LD   L,(HL)
00109 ;AND PUT IN L REG.
00110      LD   H,A
00111 ;MOVE H-VALUE.
00112      POP  AF
00113 ;RESTORE AF REG.
00114      RET
00115 ;
00116 ;
00117 ;RESTORE REGISTERS AND
00118 ;ENABLE INTERRUPTS FOR
00119 ;RETURN TO BASIC.
00120 RESR POP  HL
00121 ;GET RET ADDR.
00122      POP  AF
00123      POP  BC
00124      POP  DE
```

```
00125        EX   (SP),HL
00126 ;RESTORE HL & PUT RET ADDR.
00127 ;ON STACK.
00128        EI
00129        RET
00130 ;
00131 ;
00132 ;SCREEN 1 - OPEN-UP.
00133 ;USE STACK TO STORE UPPER
00134 ;HALF POINTERS.
00135 ;USE IX AND IY REGS. TO
00136 ;STORE LOWER HALF POINTERS.
00137 SC1  CALL SAVR
00138 ;SAVE REGISTERS.
00139        PUSH IX
00140        PUSH IY
00141        LD   HL,S8F1+HSZC
00142 ;PT. TO START OF LOWER-HALF.
00143        LD   DE,SSCN+HSZC
00144 ;PT. TO CORRESPONDING DEST.
00145        PUSH HL
00146 ;PUT SOURCE HL INTO IX.
00147        POP  IX
00148        PUSH DE
00149 ;PUT DEST. DE INTO IY.
00150        POP  IY
00151        DEC  HL
00152 ;PT. TO END OF UPPER-HALF.
00153        DEC  DE
00154 ;PT. TO CORRESPONDING DEST.
00155        LD   B,20H
00156 ;HALF NO. OF SCREEN LINES.
00157 NLN1 PUSH BC
00158 ;SAVE LINE COUNTER.
00159        LD   BC,LLEN
00160 ;SIZE - 1 LINE.
00161        LDDR
00162 ;MOVE IT - UPPER HALF LINE.
00163        PUSH HL
00164 ;SAVE PTR. ON STACK.
00165        PUSH DE
00166 ;SAVE PTR. ON STACK.
00167        PUSH IX
00168 ;RESTORE LOWER HALF SOURCE.
00169        POP  HL
00170        PUSH IY
00171 ;RESTORE LOWER HALF DEST.
00172        POP  DE
00173        LD   BC,LLEN
00174 ;SIZE - 1 LINE.
00175        LDIR
00176 ;MOVE IT - LOWER HALF LINE.
00177        PUSH HL
00178        POP  IX
00179 ;PUT SOURCE HL INTO IX.
00180        PUSH DE
00181        POP  IY
00182 ;PUT DEST. DE INTO IY.
00183        CALL DPLY
00184 ;DISPLAY AND PAUSE.
00185        POP  DE
00186 ;RESTORE UPPER HALF PTRS.
00187        POP  HL
00188        POP  BC
00189 ;RESTORE LINE COUNTER.
00190        DJNZ NLN1
00191 ;WHOLE SCREEN MOVED?
00192        POP  IY
00193        POP  IX
00194        CALL RESR
00195 ;RESTORE REGS.
00196        RET
00197 ;FINISH.
00198 ;
00199 ;
00200 ;SCREEN 2 - ROLL DOWN.
00201 ;NOTE THAT SCREENS 2 AND 3
00202 ;ARE INTERCHANGED IN
00203 ;DISPLAY SEQUENCE.
00204 SC2  CALL SAVR
00205 ;SAVE REGS.
00206        LD   HL,S8F3
00207 ;SOURCE.
00208        LD   DE,SSCN
00209 ;DESTINATION.
00210        LD   B,NLIN
00211 ;LINE COUNTER.
00212 NLN2 PUSH BC
00213 ;SAVE LINE COUNTER.
00214        LD   BC,LLEN
00215 ;SIZE - ONE FULL LINE.
00216        LDIR
00217 ;MOVE IT.
00218        CALL DPLY
00219 ;DISPLAY AND PAUSE.
00220        POP  BC
00221 ;RESTORE LINE COUNTER.
00222        DJNZ NLN2
00223 ;SCREEN FULL?
00224        CALL RESR
00225 ;RESTORE REGS.
00226        RET
00227 ;FINISH
00228 ;
00229 ;
00230 ;SCREEN 3 - PUSH DOWN.
00231 SC3  CALL SAVR
00232 ;SAVE REGS.
00233        LD   HL,S8F4-1
00234 ;SOURCE - END OF S8F3.
00235        LD   B,NLIN+1
00236 ;LINE COUNTER.
00237 NSN3 PUSH BC
00238 ;SAVE LINE COUNTER.
00239        LD   DE,ESCN-1
00240 ;DESTINATION - END OF SCREEN
00241        LD   BC,SZSC
00242 ;SIZE - SCREEN FULL.
00243        LDDR
00244 ;MOVE IT.
00245        LD   BC,SZSC-LLEN
00246 ;1 SCREEN FULL LESS 1 LINE.
00247        ADD  HL,BC
00248 ;RESET SOURCE ONE LINE ON.
```

```
00249        CALL DPLY
00250 ;DISPLAY AND PAUSE.
00251        POP  BC
00252 ;RESTORE LINE COUNTER.
00253        DJNZ NSN3
00254 ;WHOLE SCREEN MOVED?
00255        CALL RESR
00256 ;RESTORE REGS.
00257        RET
00258 ;FINISH
00259 ;
00260 ;
00261 ;SCREEN 4 - ROLL UP.
00262 SC4  CALL SAVR
00263 :SAVE REGS.
00264        LD   HL,SBF5-1
00265 :SOURCE - END OF SBF4.
00266        LD   DE,ESCN-1
00267 :DEST. - END OF SCREEN.
00268        LD   B,NLIN
00269 ;LINE COUNTER.
00270 NLN4 PUSH BC
00271 ;SAVE LINE COUNTER.
00272        LD   BC,LLEN
00273 ;SIZE - 1 LINE.
00274        LDDR
00275 :MOVE IT.
00276        CALL DPLY
00277 :DISPLAY AND PAUSE.
00278        POP  BC
00279 :RESTORE LINE COUNTER.
00280        DJNZ NLN4
00281 :SCREEN FULL?
00282        CALL RESR
00283 :RESTORE REGS.
00284        RET
00285 :FINISH
00286 :
00287 :
00288 ;SCREEN 5 - PUSH UP.
00289 SC5  CALL SAVR
00290 ;SAVE REGS.
00291        LD   HL,SBF5-1
00292 :SOURCE - END OF SBF4.
00293        LD   B,NLIN+1
00294 :LINE COUNTER.
00295 NSN5 PUSH BC
00296 ;SAVE LINE COUNTER.
00297        LD   DE.ESCN-1
00298 :DESTINATION - END OF SCREEN
00299        LD   BC,SZSC
00300 ;SIZE - SCREEN FULL.
00301        LDDR
00302 :MOVE IT.
00303        LD   BC.SZSC+LLEN
00304 :1 SCREEN FULL PLUS 1 LINE.
00305        ADD  HL,BC
00306 :RESET SOURCE ONE LINE BACK.
00307        CALL DPLY
00308 :DISPLAY AND PAUSE.
00309        POP  BC
00310 :RESTORE LINE COUNTER.
00311        DJNZ NSN5
00312 ;WHOLE SCREEN MOVED?
00313        CALL RESR
00314 ;RESTORE REGS.
00315        RET
00316 ;FINISH.
00317 ;
00318 ;
00319 :SCREEN 6 - 4 BAR ROLL DOWN.
00320 SC6  CALL SAVR
00321 ;SAVE REGS.
00322        LD   HL,SBF6
00323 :SOURCE - START OF SBF6.
00324        LD   DE,SSCN
00325 :DESTINATION - START OF SCRN
00326        LD   B,10H
00327 ;NO. OF LINES/BAR.
00328 NBR6 PUSH BC
00329 :SAVE LINE COUNTER.
00330        LD   B,4H
00331 ;NO. OF BARS.
00332 NLN6 PUSH BC
00333 ;SAVE BAR COUNTER.
00334        LD   BC,LLEN
00335 :SIZE - 1 LINE.
00336        LDIR
00337 :MOVE IT.
00338        LD   BC,200H-LLEN
00339 :INC. FOR START OF NEXT BAR.
00340        ADD  HL,BC
00341 :POINT TO START OF NEXT BAR.
00342        EX   DE,HL
00343 ;SWAP SOURCE AND DEST.
00344        ADD  HL,BC
00345 :POINT TO START OF NEXT BAR.
00346        EX   DE,HL
00347 :SWAP DEST AND SOURCE.
00348        POP  BC
00349 :RESTORE BAR COUNTER.
00350        DJNZ NLN6
00351 :4 BARS DONE?
00352        LD   BC,SZSC-LLEN
00353 :DEC. FOR NEXT LINE.
00354        OR   A
00355 :RESET C-FLAG.
00356        SBC  HL,BC
00357 ;POINT TO NEXT SOURCE LINE.
00358        EX   DE,HL
00359 :SWAP SOURCE AND DEST.
00360        OR   A
00361 :RESET C-FLAG.
00362        SBC  HL,BC
00363 :POINT TO DEST.
00364        EX   DE,HL
00365 :SWAP DEST AND SOURCE.
00366        CALL DPLY
00367 ;DISPLAY AND PAUSE.
00368        POP  BC
00369 :RESTORE LINE COUNTER.
00370        DJNZ NBR6
00371 :SCREEN FINISHED?
00372        CALL RESR
```

```
00373 ;RESTORE REGS.
00374        RET
00375 ;FINISH.
00376 ;
00377 ;
00378 ;SCREEN 7 - L TO R SWEEP.
00379 SC7  CALL SAVR
00380 ;SAVE REGS.
00381        PUSH IX
00382        PUSH IY
00383        LD   IX,SBF7
00384 ;POINT TO INCOMING BYTE.
00385        LD   IY,SSCN
00386 ;POINT TO REPLACED BYTE.
00387        LD   B,LLEN
00388 ;SET COLUMN COUNTER.
00389 NCL7 PUSH BC
00390 ;SAVE COLUMN COUNTER.
00391        LD   H,0FFH
00392 ;PIXEL MASK TEMPLATE.
00393        LD   B,4
00394 ;SET PIXEL COUNTER.
00395 NPX7 PUSH BC
00396 ;SAVE PIXEL COUNTER.
00397        SRL  H
00398 :SHIFT MASK FOR RH. PIXEL
00399        SRL  H
00400 :PRESERVATION IN H-REG.
00401        LD   A,H
00402 :PUT MASK INTO ACC.
00403        CPL
00404 ;.NOT.MASK IN ACC.
00405        LD   L,A
00406 :NOT.MASK IN L-REG. FOR
00407 ;LH. PIXEL PRESERVATION.
00408        LD   B.NLIN
00409 ;SET LINE COUNTER.
00410 NLN7 LD   A.(IX+ZERO)
00411 :PUT INCOMING BYTE INTO ACC.
00412        AND  L
00413 ;MASK OUT RH. PIXELS.
00414        LD   D.A
00415 ;SAVE LH. PIXELS.
00416        LD   A.(IY+ZERO)
00417 ;PUT REPLACED BYTE INTO ACC.
00418        AND  H
00419 ;MASK OUT LH. PIXELS.
00420        OR   D
00421 ;LOGICAL ADD RH & LH PIXELS.
00422        LD   (IY+ZERO),A
00423 ;UPDATE SCREEN.
00424        LD   DE.LLEN
00425 ;INC. BY 1 LINE.
00426        ADD  IX.DE
00427 ;POINT TO NEXT LINE/INCOMING
00428        ADD  IY.DE
00429 ;POINT TO NEXT LINE/REPLACED
00430        DJNZ NLN7
00431 ;SEE IF LINES FINISHED?
00432        CALL DPLY
00433 ;DISPLAY AND PAUSE.
00434        LD   DE.BIG-SZSC
00435 ;DEC. TO RETURN TO TOP OF
00436 ;CURRENT COLUMN.
00437        ADD  IX,DE
00438 ;POINT TO TOP OF CURRENT COL
00439        ADD  IY,DE
00440 ;POINT TO TOP OF CURRENT COL
00441        POP  BC
00442 ;RESTORE PIXEL COUNTER.
00443        DJNZ NPX7
00444 ;SEE IF ALL PIXESS FINISHED?
00445        INC  IX
00446 ;POINT TO NEXT COLUMN.
00447        INC  IY
00448 ;POINT TO NEXT COLUMN.
00449        POP  BC
00450 ;RESTORE COLUMN COUNTER.
00451        DJNZ NCL7
00452 ;SEE IF COLUMNS FINISHED?
00453        POP  IY
00454        POP  IX
00455        CALL RESR
00456 ;RESTORE REGS.
00457        RET
00458 ;FINISH.
00459 ;
00460 ;
00461 ;SCREEN 8 - R TO L SWEEP.
00462 SC8  CALL SAVR
00463        PUSH IX
00464        PUSH IY
00465        LD   IX,SBF8+1FH
00466 ;TOP OF R.H. COL.
00467        LD   IY,SSCN+1FH
00468 ;TOP OF RH. COL. ON SCREEN.
00469        LD   B.LLEN
00470 NCL8 PUSH BC
00471        LD   H,0FFH
00472        LD   B,4
00473 NPX8 PUSH BC
00474        SLA  H
00475        SLA  H
00476        LD   A,H
00477        CPL
00478        LD   L,A
00479        LD   B.NLIN
00480 NLN8 LD   A,(IX+ZERO)
00481        AND  L
00482        LD   D,A
00483        LD   A.(IY+ZERO)
00484        AND  H
00485        OR   D
00486        LD   (IY+ZERO),A
00487        LD   DE,LLEN
00488        ADD  IX,DE
00489        ADD  IY,DE
00490        DJNZ NLN8
00491        CALL DPLY
00492        LD   DE,BIG-SZSC
00493        ADD  IX,DE
00494        ADD  IY,DE
00495        POP  BC
00496        DJNZ NPX8
```

```
00497        DEC  IX
00498        DEC  IY
00499        POP  BC
00500        DJNZ NCL8
00501        POP  IY
00502        POP  IX
00503        CALL RESR
00504        RET
00505 ;
00506 ;
00507 ;MOVE SCREEN BUFFER TO VRAM.
00508 ;DO IT IN TWO HALVES AS THE
00509 ;PROCEDURE IS INTERRUPT
00510 ;DRIVEN AND MUST BE
00511 ;ACCOMPLISHED IN 4.49 MSECS.
00512 ;TO AVOID FLICKER.
00513 ;1K BLOCK MOVE TAKES
00514 ;6.09 MSECS. ON 3.54MHZ Z80.
00515 ;(NEAR ENOUGH!)
00516 ;
00517 MTOP LD    HL,SSCN
00518      LD    DE,VRAM
00519      LD    BC,HSZC
00520      LDIR
00521 ;MOVE TOP HALF SCREEN BUFFER
00522      DI
00523      LD    BC,MBOT
00524 ;SWAP INTERRUPT VECTOR
00525 ;TO OTHER HALF.
00526      LD    (IVEC+1),BC
00527      EI
00528      RET
00529 ;
00530 ;
00531 MBOT LD    HL,SSCN+HSZC
00532      LD    DE,VRAM+HSZC
00533      LD    BC,HSZC
00534      LDIR
00535 ;MOVE BOTTOM HALF SCRN. BUF.
00536      DI
00537      LD    A,TURN
00538      LD    (IVEC),A
00539 ;SET INTERRUPT VECTOR TO RET
00540 ;AS BOTH HALVES ARE MOVED.
00541      EI
00542      RET
00543 ;
00544 ;
00545 ;INTERRUPT DRIVEN DISPLAY
00546 ;ROUTINE. A PAUSE IS DONE
00547 ;SO THAT THE TOP AND BOTTOM
00548 ;HALVES OF THE SCREEN CAN BE
00549 ;MOVED FROM THE SCREEN
00550 ;BUFFER TO VRAM.
00551 ;NB. BC REG. IS CHANGED BY
00552 ;THIS SUBROUTINE.
00553 DPLY LD    A,JMP
00554      LD    BC,MTOP
00555      LD    (IVEC+1),BC
00556      LD    (IVEC),A
00557 ;SETUP INTERRUPT VECTOR.
00558      EI
00559      LD    BC,DURD
00560 ;DELAY MSEC.
00561      CALL DLAY
00562 ;DO A DELAY - DURING WHICH
00563 ;TIME THE VRAM IS UPDATED.
00564      DI
00565      RET
00566 ;RETURN TO MOVE ROUTINES.
00567 END  EQU  $
```

CHANGE GRAPHICS BY BRIAN GREEVE - - -

THIS PROGRAM IS INTENDED FOR PEOPLE WHO HAVE PRINTERS WHICH DO NOT RESPOND TO THE VZ ROM PRINTER CONTROL WITH REGARD TO GRAPHICS AND INVERSE TEXT. THE USE OF SUCH CAN DRESS UP A PROGRAM BUT CAN CAUSE SOME DIFFICULTY WHEN A PRINTED LIST IS REQUIRED.

WHENEVER I WANTED A LLIST I WOULD HAVE TO GO THROUGH PROGRAMS AND PHYSICALLY CHANGE INVERSE TEXT TO NORMAL TEXT AND THE GRAPHIC SYMBOLS TO SOME STANDARD ASCII SYMBOL. I ALWAYS BELIEVE THAT THE COMPUTER SHOULD DO SUCH TEDIOUS WORK SO THIS UTILITY WAS CREATED.

THIS PROGRAM LOCATES IN THE HI RES SCREEN MEMORY AREA - HENCE THE FLASHES ON SCREEN WHILE IT PROCESSES - AND IS INTENDED TO BE BRUN WHEN THE PROGRAM TO BE PROCESSED HAS BEEN LOADED.

THE BASIC LOADER TAKES THE FORM OF OTHERS PREVIOUSLY PUBLISHED TO SIMPLIFY THE TASK OF LOADING THE DATA.

THE DATA VALUE 35 IN LINE NUMBER 70 DETERMINES THE SUBSTITUTION OF THE FIGURE # FOR ALL GRAPHIC SYMBOLS. THIS FIGURE CAN BE CHANGED FOR ANOTHER PROVIDING THE APPROPRIATE ASCII VALUE IS USED. (RANGE 33 TO 96 [DECIMAL]).

NOTE: VARIATION OF THIS VALUE WILL REQUIRE THE CHECKSUM DATA ERROR CONTROL TO BE OVERIDDEN.

IT IS SUGGESTED THAT THIS ALTERATION SHOULD ONLY BE TRIED AFTER THE PROGRAM DATA HAS BEEN CONFIRMED.

BASIC LISTING FOR CHANGE GRAPHICS

```
010 FOR I = -21937 TO -21713
020 READA:POKE I,A
025 CHECKSUM = CHK+A:NEXT
027 :
030 DATA 62,195,50,193,121,33,102,170,34,194,121,205,201,1,33
032 DATA 17,171,205,167,40,195,25,26,58,156,120,51,51,183,121
034 DATA 193,250,84,59,202,58,3,229,245,33,155,120,52,126,254
036 DATA 79,32,7,54,0,62,13,205,186,58,241,225,254,13,32,7,62
038 DATA 0,50,155,120,62,13,183,250,154,170,195,186,58,203,119
040 DATA 40,58,230,63,245,197,213,229,111,38,0,62,18,205,186,58
042 DATA 6,4,229,209,183,237,90,16,252,229,193,33,148,59,9,62
044 DATA 255,205,186,58,6,5,126,35,205,186,58,16,249,62,255,205
046 DATA 186,58,62,30,205,186,58,225,209,193,241,201,197,71,62
048 DATA 18,205,186,58,120,230,15,229,203,39,79,62,30,145,79,175
050 DATA 71,33,175,2,9,126,71,35,126,79,120,205,186,58,205,186
052 DATA 58,205,186,58,121,205,186,58,205,186,58,205,186,58,62
054 DATA 30,205,186,58,225,193,201,13,84,65,78,68,89,32,80,82
056 DATA 73,78,84,69,82,32,80,65,84,67,72,32,76,79,65,68,69,68
058 DATA 13,0,0,0
060 :
075 IF CHECKSUM <> 25562 THEN PRINT"DATA ERROR":END
080 CLS:PRINT"SAVE TO DISK OR TAPE    (D/T)"
090 A1$=INKEY$:A$=INKEY$:IFA$<>"D"ANDA$<>"T"THEN90
100 SOUND30,1:IFA$="T"THEN180
110 IF PEEK( 16384 ) = 170.140
120 PRINT"NO DISK DRIVE TO USE"
130 GOTO 180
135 :
140 PRINT"INSERT DISK,CLOSE DOOR & PRESS  RETURN"
150 IFINKEY$<>CHR$(13),150
155 SOUND30,1
160 BSAVE"TANDY",AA4F,AB2F
170 END
175 :
180 FOR I = 29440 TO 29484
190 READ A: POKEI,A: NEXT
200 PRINT"INSERT CASSETTE,PRESS PLAY &   RECORD THEN RETURN"
210 IF INKEY$ <> CHR$(13),210
220 SOUND 30,1
230 POKE30862,0:POKE30863,115:X=USR(0)
240 END
245 :
250 DATA 33,79,170,34,164,120,33,47,171,34,249,120
260 DATA 33,38,115,14,241,243,205,172,52,251,33,233,122
270 DATA 34,164,120,205,248,26,35,34,249,120
280 DATA 195,25,26,34,84,65,78,68,89,34
```

SOURCE CODE LISTING - - -

```
A568 CD C9 01
A56E 21 E9 7A
A571 22 A4 78
A574 23
A575 23
A576 23
A577 23
A578 7E
A579 FE 22
A57B 28 12
A57D FE 00
A57F 20 F6
A581 23
A582 B6
A583 20 EF
A585 23
A586 B6
A587 20 EC
A589 22 F9 78
A58C C3 19 1A
A58F 23
A590 7E
A591 FE 22
A593 28 E2
A595 FE 00
A597 28 E8
A599 FE 7F
A59B 38 F2
A59D FE BF
A59F 38 09
A5A1 FE DF
A5A3 38 09
A5A5 D6 C0
A5A7 77
A5A8 18 E5
A5AA 3E 23
A5AC 18 F9
A5AE D6 80
A5B0 18 F5
BYTES FREE :- 22475
```

```
001 ;
002 ;   ### CHANGE GRAPHICS ###
003 ;TO CONVERT GRAPHIC CODE
004 ;TO ALLOW PRINT OUT BY
005 ;STANDARD PRINTER (TANDY)
006 ;V 2 JUNE 29 89   ORG 7200H
007 ;
008        CALL 01C9H
009        LD   HL,7AE9H
010        LD   (78A4H),HL
011 INC4   INC  HL
012 INC3   INC  HL
013        INC  HL
014 INC    INC  HL
015 MP     LD   A,(HL)
016        CP   34
017        JR   Z,TEXT
018        CP   0
019        JR   NZ,INC
020 SZ     INC  HL
021        OR   (HL)
022        JR   NZ,INC4
023        INC  HL
024        OR   (HL)
025        JR   NZ,INC3
026        LD   (78F9H),HL
027        JP   1A19H
028 TEXT   INC  HL
029        LD   A,(HL)
030        CP   34
031        JR   Z,INC
032        CP   0
033        JR   Z,SZ
034        CP   7FH
035        JR   C,TEXT
036        CP   0BFH
037        JR   C,GRPH
038        CP   0DFH
039        JR   C,INVA
040        SUB  0C0H
041 AA     LD   (HL),A
042        JR   TEXT
043 GRPH   LD   A,23H
044        JR   AA
045 INVA   SUB  80H
046        JR   AA
ERRORS : 00000
```

NOTE - - -

FOR YOUR CONVENIENCE BASIC LISTING IS PROVIDED ON PREVIOUS PAGE WHILE MACHINE CODE IS ABOVE LEFT AND SOURCE CODE LISTING IS ABOVE RIGHT.

29/13 COMPUTERS PLUS PRINTERS

FOR GENERAL USE THERE ARE TWO TYPES OF INPUT STANDARDS THAT PRINTERS AND COMPUTERS WORK UNDER. THESE ARE CENTRONICS PARALLEL AND SERIAL INPUT STANDARDS. MOST PRINTERS AND COMPUTERS HAVE ONE OF THE ABOVE STANDARDS BUILT IN WITH SOME HAVING BOTH. SOME PRINTERS AND SOME COMPUTERS LIKE THE VZ NEED A PRINTER INTERFACE TO WORK.

CENTRONICS PARALLEL . . .

THE VZ PRINTER INTERFACE CONVERTS VZ'S OUTPUT TO CENTRONICS PARALLEL AND WILL WORK WITH ANY CENTRONICS PARALLEL COMPATIBLE PRINTER OR PLOTTER, BLACK & WHITE OR COLOUR. THE VZ CANNOT PRINTOUT WITHOUT BEING CONNECTED TO A PRINTER VIA A PRINTER INTERFACE AND WILL NOT WORK WITH A PRINTER HAVING ONLY SERIAL INPUT.

SERIAL INPUT/OUTPUT . . .

SERIAL INPUT PRINTERS WILL ONLY WORK WITH COMPUTERS HAVING SERIAL OUTPUT PRINTER PORTS, BUT WITH SOME EXEPTIONS. THE COMMODORE 64 IS ONE AS IT HAS A NON STANDARD SERIAL OUTPUT AND HAS TO NORMALLY BE CONNECTED TO A MATCHING COMMODORE PRINTER. THERE ARE WAYS AROUND THIS PROBLEM AS CENTRONICS PARALLEL INTERFACE CARTRIDGES CAN BE BOUGHT TO WORK WITH CENTRONIC PARALLEL INPUT PRINTERS.

USING VZ PRINTER INTERFACE . . .

MOST CENTRONIC PARALLEL PRINTERS WILL NOT PRINT OUT VZ INVERSE OR GRAPHIC CHARACTERS OR COPY A LO/HI-RES GRAPHIC SCREEN. THE ONE EXEPTION THAT I KNOW OF IS THE GP100 WHICH IS NO LONGER AVAILABLE EXEPT SECOND HAND AND HAS VERY LIMITED FUNCTIONS.

PRINTER PATCHES & MODIFIED ROMS . . .

THE FIRST PRINTER PATCH WAS WRITTEN BY JAMIE PERRY AND IT PRINTED OUT ALL INVERSE AND GRAPHIC CHARACTERS. IT WAS SLOW AS IT PRINTED ONE CHARACTER AT A TIME, BUT YOU NO LONGER HAD TO MODIFY TEXT BEFORE PRINTING WHICH WAS A BIG PLUS.

LARRY TAYLOR WROTE A VERY VERSATILE PATCH WHICH WAS MUCH FASTER AND HAD MANY MORE FUNCTIONS LIKE VERY VERSATILE LO/HI-RES SCREEN DUMPS. I USE IT TO PRODUCE BOTH HI & LO-RES SCREEN DUMPS FOR THE JOURNAL. IT COULD STILL BE AVAILABLE FROM JOHN D'ALTON AND IS WELL WORTH THE MONEY.

SOME MODIFIED BASIC ROMS WERE MARKETED BY LASERLINK. IT HAD ALL THE EXTENDED BASIC COMMANDS ACTIVATED AS WELL AS MODIFIED LLIST AND LLPRINT ROUTINES WHICH PRINTED OUT ALL INVERSE AND GRAPHIC CHARACTERS AND IS THE BEST ALTERNATIVE AS NO PATCHES NEED BE LOADED AND THE ROM'S FUNCTIONS ARE AVAILABLE AT POWER UP.

DMP & DAISY WHEEL PRINTERS . . .

DMP (DOT MATRIX PRINTERS) ARE MORE COMMON AND THEY USE A MATRIX OF PINS FROM 8 TO 24 TO FORM LETTERS, GRAPHIC OR INVERSE CHARACTERS AND THE MORE PINS THE HIGHER QUALITY PRINTOUT. DAISY WHEEL PRINTERS ON THE OTHER HAND USE FORMED LETTERS ON A PETAL LIKE IN A TYPWRITER AND PRODUCE HIGH LETTER QUALITY PRINTOUT BUT CANNOT BE USED FOR GRAPHICS OR INVERSE TEXT PRINTING ON THE VZ.

COLOUR PRINTERS OR PLOTTERS

THESE CAN BE USED WITH THE VZ, BUT THE USER MUST ENABLE THE COLOUR OPTIONS HIM/HERSELF AND TO THE BEST OF MY KNOWLEDGE THERE ARE NO PATCHES AVAILABLE WHICH WILL PRINTOUT HI & LO-RES SCREENS IN APPROPRIATE COLOURS. THE ONE PATCH THAT I KNOW OF IS FOR THE PRINTER PLOTTER WHICH WILL PRINT OUT HI-RES SCREENS IN FOUR COLOURS. IT MAY OR MAY NOT BE POSSIBLE TO CONVERT THIS FOR COLOUR DMP.

VZ 200/300 SERIAL INTERFACE

BY PETER AND ANDY HICKMAN

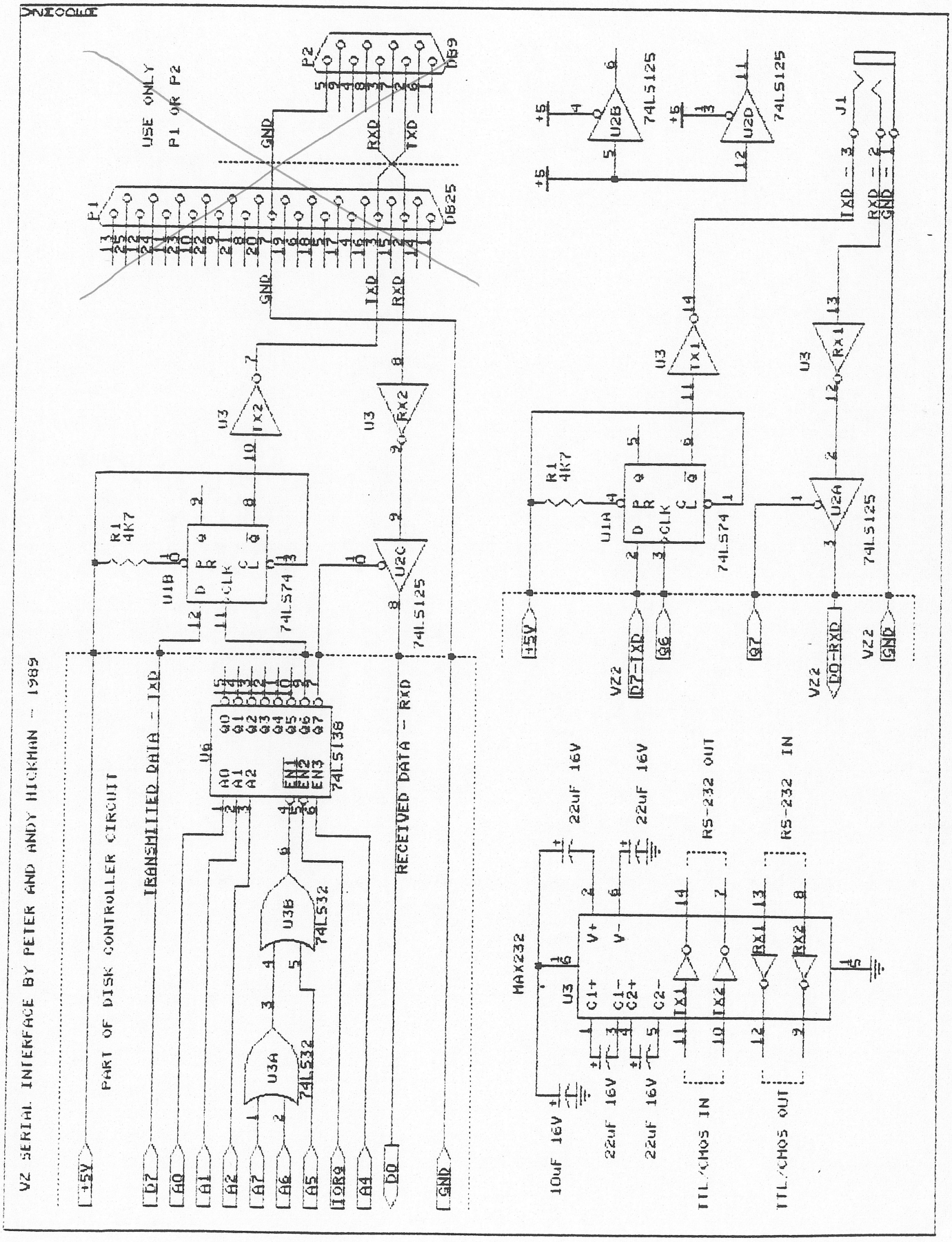

VZ 200/300 SERIAL INTERFACE CONTINUED . . .

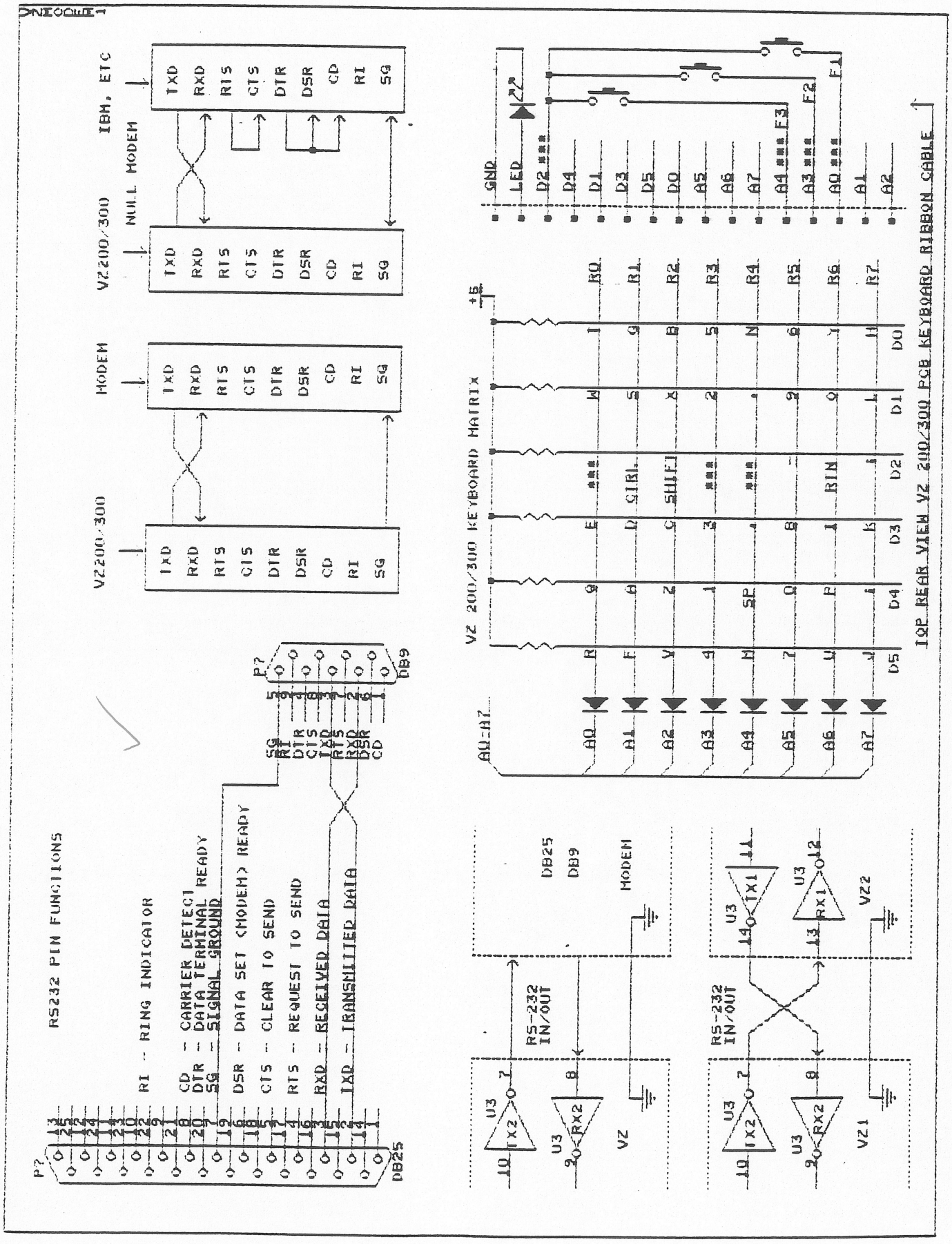

UPDATE ON RS-232 PORT - SIMPLER CONSTRUCTION

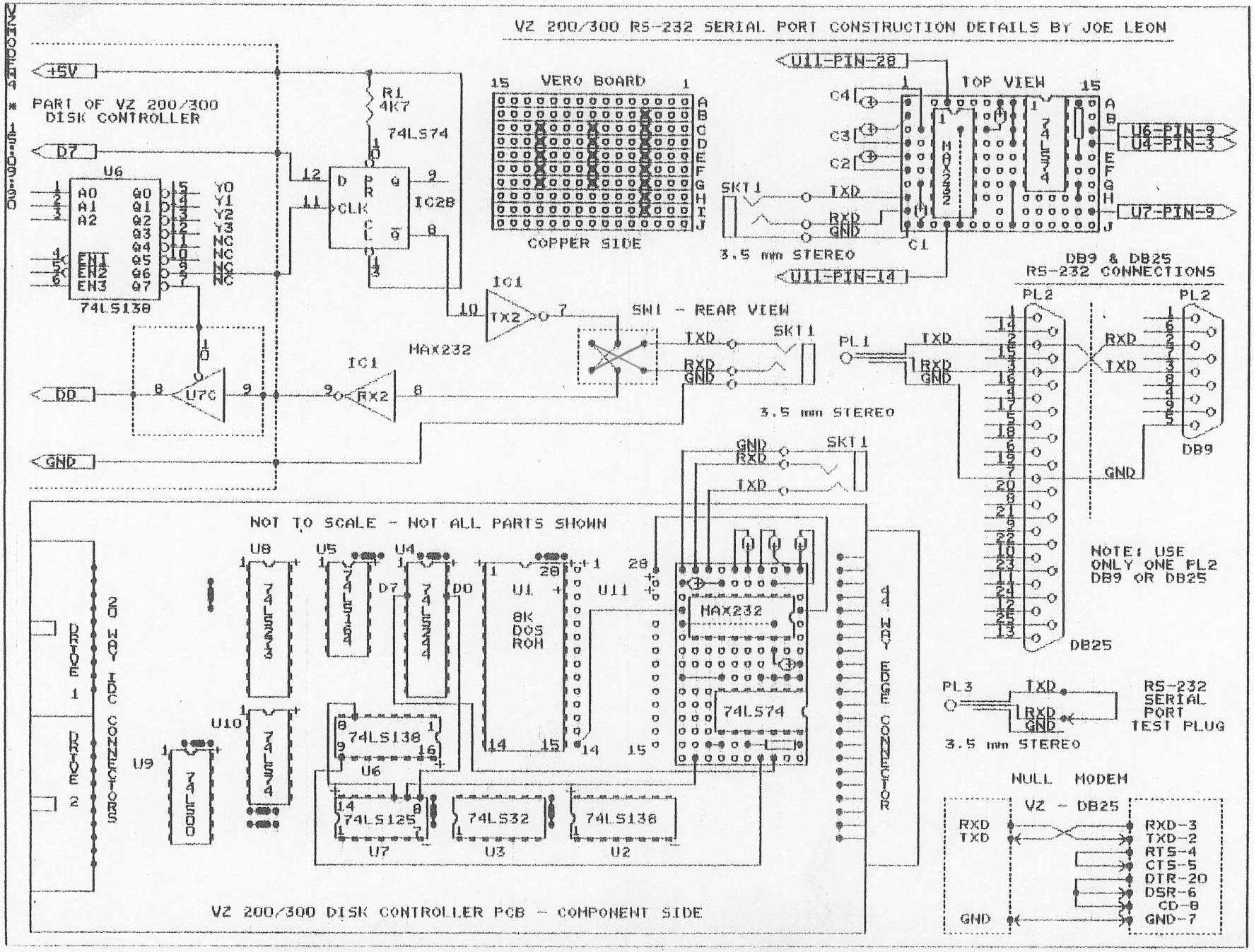

VZ SERIAL INTERFACE CONTINUED 29/16

LIKE MANY DSE VZ TERMINAL USERS PETER WAS FRUSTRATED BY ITS SEVERE LIMITATIONS SO IN CORROBORATION WITH HIS BROTHER ANDY THEY HAVE REDESIGNED BOTH THE SOFTWARE AND HARDWARE. AS DSE TERMINALS ARE PRACTICALLY IMPOSSIBLE TO BUY THIS PROJECT REPRESENTS A MUCH CHEAPER AND MORE FUNCTIONAL ALTERNATIVE.

NOTE: THE SOFTWARE FOR THIS SERIAL INTERFACE IS DISK BASED ONLY.

THE PARTS COUNT IS QUITE SMALL, JUST THREE CHIPS, 5 CAPACITORS AND ONE OR TWO CONNECTOR PLUGS. IT IS POSSIBLE TO BUILD THE CIRCUIT INSIDE THE DISK CONTROLLER BY PIGGYBACKING THE 74LS74 AND 74LS125 ON EXISTING CHIPS AND PLACING MAX232 CHIP NEAR THE EDGE CONNECTOR.

A 3.5MM STEREO SOCKET COULD BE USED AS ONLY THREE WIRES ARE INVOLVED, TXD (TRANSMIT DATA), RXD (RECEIVE DATA) AND GROUND. IT WOULD MAKE FOR A NICE COMPACT UNIT WITH NO BOXES TO PLUG IN. ALTERNATIVELY A SMALL BOX COULD BE USED BUT WOULD REQUIRE SIX WIRES, +5V, GND, Q6, Q7 (U6-74LS138), DATA LINE Ø & 7. IT CAN ALSO BE BUILT INTO VZ 200/300 BUT WOULD REQUIRE DUPLICATING DECODING CIRCUITRY.

THE 74LS138 (U6) DECODER IN THE DISKCONTROLLER USES ONLY FIRST FOUR OUTPUTS SO FOUR ARE SPARE AND THE LAST TWO OUTPUTS ARE USED FOR CONTROLLING THE SERIAL INTERFACE WHICH SAVES TWO EXTRA CHIPS. THE 74LS74 'D' TYPE FLIP FLOP PASSES DATA TO A SECTION OF A MAX232 (U3-T2) CHIP FOR TRANSMITTING TO A MODEM OR ANOTHER COMPUTER.

FOR RECEIVING A SECTION OF MAX232 (U3-R2) IS USED WHICH PASSES DATA VIA A 74LS125 (U2C) TRISTATE BUFFER TO THE VZ. DATA LINE ZERO (Ø) IS USED FOR RECEIVING DATA WHILE DATA LINE SEVEN (7) IS USED FOR TRANSMITTING DATA.

THE MAX232 CHIP HAS TWO TRANSMITTERS AND TWO RECEIVERS AND ONLY ONE OF EACH IS NEEDED FOR THE SERIAL INTERFACE. ONLY ONE OF TWO FLIP FLOPS (74LS74) AND ONE OF FOUR TRISTATE BUFFERS (74LS125) ARE USED. THAT MEANS A SECOND SERIAL INTERFACE CAN BE BUILT FOR PRACTICALLY NO ADDITIONAL EXPENSE. NORMALLY A DB25 PIN OR DB9 PIN PLUG IS USED FOR CONNECTING TO A MODEM OR ANOTHER COMPUTER.

THE SECOND SERIAL INTERFACE IS SHOWN BELOW THE FIRST ONE AND SHARES COMMON SIGNALS LIKE +5V, GND, Q6 & Q7. DØ, D7 AND GND WOULD COME FROM SECOND VZ VIA A 3.MM SOCKET WHICH IS SMALL AND EASY TO FIT. THE CONNECTION TO A MODEM OR ANOTHER COMPUTER WOULD NORMALLY BE VIA A DB25 OR DB9 CONNECTOR AND CONNECTIONS TO BOTH ARE SHOWN BUT ONLY ONE IS USED DEPENDING ON CONNECTOR YOU PLUG INTO.

THE MAX232 BLOCK DIAGRAM SHOWS THE FUNCTIONAL OPERATION OF THE CHIP. FOR COMPACTNESS TANTALUM CAPACITORS CAN BE USED EXSPECIALLY IF BUILDING UNIT INSIDE DISK CONTROLLER. A SMALL PIECE OF VEROBOARD CAN BE USED TO MOUNT THE MAX232 CHIP AND CAPACITORS AND OR OTHER TWO CHIPS AS WELL.

THE Q6 & Q7 SIGNALS ARE TAKEN DIRECT FROM THE 74LS138 DECODER IN THE DISK CONTROLLER. ALL UNUSED INPUTS ON 74LS74 AND 74LS125 MUST BE TIED HIGH OR UNWANTED OSCILLATION COULD OCCUR. THERE ARE THREE CONSTRUCTION OPTIONS. INSIDE DISK CONTROLLER, EXTERNAL BOX OR INSIDE THE VZ AND I LEAVE IT TO YOU ON WHICH OPTION YOU ADOPT.

NOTE: YOU'LL NEED ANOTHER COMPUTER OR VZ WITH A RS232 SERIAL INTERFACE TO TEST UNIT OUT.

29/17 VZ SERIAL INTERFACE CONTINUED

BEFORE PROCEEDING TO TEST UNIT THERE ARE SEVERAL THINGS THAT NEED EXPLAINING. WE'LL START WITH DB25 AND DB9. YOU'LL NOTE THAT ON DB25 TXD IS CONNECTED TO PIN 2 WHILE RXD IS CONNECTED TO PIN 3. THE REVERSE IS TRUE FOR DB9. SOME EQUIPMENT COULD COME WITH DB25 OR DB9 CONNECTORS AND MY IBM PC COMPATIBLE HAS TWO SERIAL PORTS HAVING BOTH CONNECTORS.

AS FAR AS THE VZ IS CONCERNED ONLY THREE SIGNALS ARE USED WHICH ARE TXD, RXD AND GND. CONNECTING TO A MODEM IS STRAIGHT-FORWARD. JUST USE A DB25 OR DB9 . CONNECTOR AND WIRE UP THE THREE SIGNALS ACCORDING TO THE CONVENTION. ON PAGE 15 BOTTOM LEFT YOU'LL NOTE TWO DIAGRAMS ON HOW TO CONNECT VZ TO A MODEM OR ANOTHER VZ.

THE TWO TOP RIGHT DIAGRAMS DEPICT FIRST AGAIN CONNECTING COMPUTER TO A MODEM. THE NULL MODEM DIAGRAM IS HOW THE VZ AND ANOTHER COMPUTER LIKE THE IBM PC SHOULD BE CONNECTED. THE OTHER SIGNALS ARE SHOWN FOR CLARITY.

NOTE: THE MATERIAL FOR THIS PROJECT CAME FROM PETER AND ANDY HICKMAN WHO DID AN EXELLENT JOB IN DESIGNING BOTH THE SOFTWARE AND HARDWARE. I WOULD LIKE TO THANK LOCAL MEMBERS FOR THEIR HELP AND RESEARCH WITH ABOVE PROJECT. ED.

FUNCTION KEYS . . .

IN THE SOFTWARE PETER HAS MADE PROVISION FOR EXTRA FUNCTION KEYS. THEY CAN BE USED WITH ABOVE SOFTWARE OR YOU COULD WRITE YOUR OWN WHICH CAN GIVE YOU UP TO 12 EXTRA FUNCTIONS, FOUR PER KEY LIKE SOME OF THE OTHER KEYS ON THE VZ. ALL THE DISK WORDS COULD BE ACTIVATED JUST BY A KEY PRESS OR TWO.

AS YOU'LL NOTE BY THE KEYBOARD MATRIX THERE ARE THREE PHYSICAL LOCATIONS EACH MARKED BY THREE ASTERICKS WHERE KEYS HAVE NOT BEEN CONNECTED. IT IS FAIRLY SIMPLE TO CONNECT THREE FUNCTION KEYS IN THOSE LOCATIONS. THE BOTTOM RIGHT DIAGRAM SHOWS WHERE THE CONNECTIONS ARE MADE.

I WOULD SUGGEST ROUND PUSHBUTTON KEYS WITH ABOUT 3/8" TOPS AS SOLD BY VARIOUS ELECTRONIC SHOPS. THE KEYS COULD BE MOUNTED ON A NARROW PIECE OF VEROBOARD AND IN THE CASE OF VZ300 PLACED JUST ABOVE THE KEYBOARD ON THE FLAT AND MOUNTED FROM UNDERNEATH. USING ROUND KEYS MAKES IT EASIER TO DRILL HOLES TO FIT THAN WOULD BE THE CASE FOR SQUARE TOPPED KEYS.

CONCLUSION . . .

WHEN COMPLETED, THIS VZ 200/300 RS-232 SERIAL INTERFACE WILL ALLOW YOU TO CONNECT IT TO A MODEM, ANOTHER COMPUTER AND TRANSMIT, RECEIVE AT 300 BAUD. DATA CAN BE PRELOADED FROM DISK BEFORE TRANSMITTING TO SAVE LOG ON TIME. THE SOFTWARE IS VERY VERSATILE AND PETER HAS GONE TO GREAT LENGHTS TO PROVIDE AS MANY FUNCTIONS AS POSSIBLE.

IT IS REFRESHING TO SEE NEW AND USEFUL PROJECTS MAKING AN APPEARANCE FOR THE VZ CONSIDERING THE PRESENT STATE OF THE VZ. WHILEVER THERE ARE PERSONS LIKE PETER AND ANDY HICKMAN AROUND THE VZ WILL SURVIVE. KEEP IT UP FELLAS.

FOR MORE INFORMATION ON ABOVE PROJECT OR SOFTWARE CONTACT PETER HICKMAN. FOR ADDRESS SEE HIS AD ON PAGE 18.

```
*****************************************************************
*                                                               *
*     LOOK !!!! ---  PROGRAMS FOR SALE  ---  ALL NEW !!!!       *
*                                                               *
*****************************************************************
```

<1> V Z D I S A S S E M B L E R

WHAT, ANOTHER DISASSEMBLER? BUT, YOU HAVE ALREADY GOT ONE? THIS ONE IS DIFFERENT!

THIS PROGRAM IS ENTIRELY WRITTEN IN MACHINE CODE. IT ACTUALLY RUNS ABOUT 40 TIMES FASTER THAN D.S.E.'S DISASSEMBLER (OR ANY ONE ELSE'S). IT WILL DISASSEMBLE ANY PROGRAM THAT YOU CAN BLOAD INTO MEMORY. IT WORKS WITH ANY VZ CONFIGURATION. IT DISASSEMBLES EVEN THE 88 EXTRA Z80 OPCODES THAT ZILOG DOESN'T ADMIT TO.

PRICE? ONLY $25.00 - TAPE AND DISK VERIONS AVAILABLE.

PRICE INCLUDES HARDCOPY MANUAL. INTERESTED? YOU MAY PURCHASE THIS PROGRAM FROM PETER HICKMAN, FOR ADDRESS SEE BELOW.

```
*****************************************************************
*                                                               *
*  BRAND NEW  -  VZ SERIAL INTERFACE PROGRAM  -  BRAND NEW      *
*                                                               *
*****************************************************************
```

<2> V Z M O D E M S O F T W A R E

DID YOU WANT TO TALK TO OTHER COMPUTERS VIA A MODEM? DID YOU BUY THE DSE TERMINAL EPROM, ONLY TO DISCOVER THAT IT ONLY WORKS WITH TAPE. IT ONLY ALLOWS YOU TO PRINT FILES, NOT SAVE THEM OR SEND THEM!

YOUR PROBLEMS ARE SOLVED! THE HICKMAN BROTHERS, PETER AND ANDREW, HAVE A BRAND NEW PROJECT WHICH WILL ALLOW YOU TO SEND, RECEIVE & SAVE FILES VIA A MODEM. IT WORKS WITH DISK!

SALE PRICE $25.00 ONLY

INCLUDED ARE INSTRUCTIONS FOR THE HARDWARE MODIFICATIONS.

A SMALL MODIFICATION IS NEEDED TO YOUR DISK CONTROLLER. YOUR USER GROUP MAY HELP YOU MODIFY YOUR COMPUTER TO USE THIS EXCITING NEW SOFTWARE! IF YOU HAVE THE FUNCTION KEYS MOD AS WELL, THEN YOU WILL BE ABLE TO SEND EXTRA ASCII CHARACTERS SUCH AS:-

{|}~_

THE MANUAL IS SUPPLIED ON DISK FOR YOU TO PRINT OUT WITH YOUR DISK VERSION OF E & F WORDPROCESSOR. IF YOU DO NOT OWN AN E & F WORDPROCESSOR PROGRAM, PLEASE ENCLOSE ANOTHER $5.00 (TOTAL $30.00) FOR PHOTOCOPYING AND POSTAGE OF THE MANUAL.

FOR PURCHASE OR MORE INFORMATION CONTACT:-
PETER HICKMAN P.O. BOX 8, WERRINGTON N.S.W. 2760.

VZ USER GROUPS/PUBLICATIONS

CONTRIBUTIONS TO THE HUNTER VALLEY VZ JOURNAL :-

IF YOU ARE THINKING OF CONTRIBUTING TO THE JOURNAL THE PREFERED FORMAT IS BASIC LISTINGS, WORD PROCESSOR OR SOURCE CODE FILES ON TAPE OR DISK. FILES FROM THE FOLLOWING WORD PROCESSORS CAN BE ACCEPTED :-

E & F TAPE OR DISK PATCH 3.1-3.3, WORDPRO CARTRIDGE, WORDPRO PATCH AND ALL QUICKWRITE WORD PROCESSOR FILES.

WANTED TO BUY ----------

64K RAM PACKS - CONTACT JOE LEON
22 DRURY STREET WALLSEND NSW 2287 --- PHONE (049) 51 2756

CLUB MEETINGS ** ALL WELCOME **

FIRST FRIDAY OF MONTH - NO MEETING IN JANUARY 1990

VENUE - JESMOND NEIGHBOURHOOD CENTRE MORDUE PARADE JESMOND
(REAR STOCKLAND MALL - BIG W)

AUGUST 3 - COMPUTER SHOW WORKSHOP I
SEPTEMBER 7 - COMPUTER SHOW WORKSHOP II
MACHINE CODE & ASSEMBLY CONTINUED (MONTHLY)

FUTURE DEMONSTRATIONS -

EPROM PROGRAMMER & ERASER, AUCTION NIGHT - USING THE VZ, RITTY, ETC. IF YOU HAVE ANY IDEAS FOR A DEMONSTRATION OR A SUBJECT THEN PLEASE LET YOUR COMMITTEE KNOW.

CLUB COMMITTEE & SUBSCRIPTIONS -

PRESIDENT --------- ROSS WOODS --- (049) 71 2843
SECRETARY/EDITOR -- JOE LEON ----- (049) 51 2756
TREASURER --------- GARY BULLEY -- (049) 54 7561
COMMITTEE MEMBERS - COLIN BRIDGE - PETER JONES

SUBSCRIPTION TO - AUST. - 6 MONTHS $11.00 - 12 MONTHS $21.00
H.V.VZ.JOURNAL - N. Z. - 6 MONTHS $13.00 - 12 MONTHS $26.00

HUNTER VALLEY VZ USERS' GROUP - PO BOX 161 JESMOND 2299
NEW SOUTH WALES AUSTRALIA

VZ USER GROUPS & PUBLICATIONS --

VZ DOWN UNDER - VZ MAGAZINE - 6 ISSUES - $18.00 PER ANUM
HARRY HUGGINS 12 THOMAS SREET MITCHAM VICTORIA 3132

WAVZ - WESTERN AUSTRALIA VZ USER GROUP
GRAEME BYWATER P O BOX 388 MORLEY W A 6062

BRISBANE VZ USERS WORKSHOP - C/O 63 TINGALPA ST. WYNUM WEST 4178
SOFTWARE FOR SALE - DISK MENU

SAPPHIRE PRODUCTIONS - VZ DISK MAGAZINE - $20.00 PER ANUM
CONTACT JASON OAKLEY PO BOX 600 TAREE NSW 2430

NOTE :- WHEN WRITING TO ANY ABOVE OR H.V.VZ. USERS' GROUP FOR INFORMATION PLEASE ENCLOSE A S.S.A.E. OR NZ 2 INT. REPLY COUPONS.

FOR SALE E & F W.P.PATCH 3.3 29/20

PATCH 3.3 WRITTEN BY DAVE MITCHELL WILL CONVERT YOUR E & F TAPE WORD PROCESSOR FOR FULL DISK USE WHILE RETAINING ALL ORIGINAL FUNCTIONS. BELOW ARE ADDED DISK COMMANDS & FUNCTIONS :-

LOAD, SAVE, ERASE, RENAME, DIRECTORY, INITIALIZE, UPDATE, DRIVE 1 & 2, SHIFTLOCK & IMBEDDED PRINTER CONTROL CODES PLUS CTRL+P WHICH BYPASSES PRINT MENU AND PRINTS TO SCREEN OR PRINTER. A ROUTINE IS ALSO PROVIDED TO CONVERT YOUR BASIC PROGRAM OR SOURCE CODE FILES INTO WORD PROCESSOR FILES.

PATCH 3.3 HAS PROVISION FOR IMBEDDING PRINTER CONTROL CODES IN TEXT AND FAST SAVING AND LOADING OF TEXT DATA TO AND FROM DISK USING BLOCK SAVE/LOAD TECHNIQUES. PRINTER CONTROL CODES CAN BE SAVED TO TAPE OR DISK.

BSTWP.F - THIS UTILITY PROVIDED WITH PATCH 3.3 WILL CONVERT BASIC PROGRAMS AND ED/ASS. SOURCE CODE FILES INTO WORD PROCESSOR FILES.

SYSTEM REQUIREMENTS - VZ 300 + 16K RAM PACK - VZ 200 + 26K

PATCH 3.3 IS COPYRIGHT TO AND ONLY AVAILABLE FROM :-
HUNTER VALLEY VZ USERS' GROUP P.O.BOX 161 JESMOND 2299
N.S.W. AUSTRALIA - PHONE JOE LEON (049) 51 2756

PRICE - AUS/NZ AU$20.00 - UPDATE - AUS-$10.00 - NZ-AU$11.00.
UPDATING AVAILABLE ONLY TO PREVIOUS PURCHASERS OF PATCHES.

FOR MORE INFORMATION WRITE TO H.V.VZ.U.G. ENCLOSING A SSAE.

EXTENDED DOS V1.3 — $15.00

UPDATED VERSION WITH EXTRA COMMANDS ADDED :-

OLD COMMANDS - MERGE, DIRA, LDIRA, DIRB, LDIRB, OLD, OLD., DEC, HEX, STATUSA AND LSTATUSA. STATUSA AND LSTATUSA ALSO WORKS WITH VERSION 1.0 DOS.

NEW COMMANDS :—

MENU - LOADS AND RUNS BINARY OR TEXT MENU PROGRAM FROM DISK.
CODE - SIMPLIFIES USING PRINTER CONTROL CODES DIRECTLY OR FROM WITHIN A PROGRAM.
LTAB - IS FOR SETTING OF LEFT MARGIN.
MOVE - MOVES BASIC FILE FROM DISK TO CHOSEN MEMORY ADDRESS.
UPD - ERASES OLD FILE AND SAVES WITH SAME FILE NAME.

MENU/FILE COPIER — $15.00

THIS UTILITY WILL READ YOUR DISK DIRECTORY AND PRESENT YOU WITH SEVERAL OPTIONS. USING THE CURSOR YOU CAN RUN/BRUN ANY PROGRAM OR SELECT FILE COPY, REN, ERASE, DRIVE 1 OR 2, ETC. BESIDES COPYING TEXT AND BINARY FILES ALL OTHER FILES CAN BE COPIED AS WELL EXEPT FOR DATA FILES.

FOR PURCHASE OR INFORMATION CONTACT DAVE MITCHELL - (079) 27 8519
24 ELPHINSTONE ST. NORTH ROCKHAMPTON QUEENSLAND 4701

FOR INFORMATION OR DEMONSTRATION IN NEWCASTLE AREA CONTACT :-
JOE LEON - (049) 51 2756 - 22 DRURY STREET WALLSEND NSW 2287